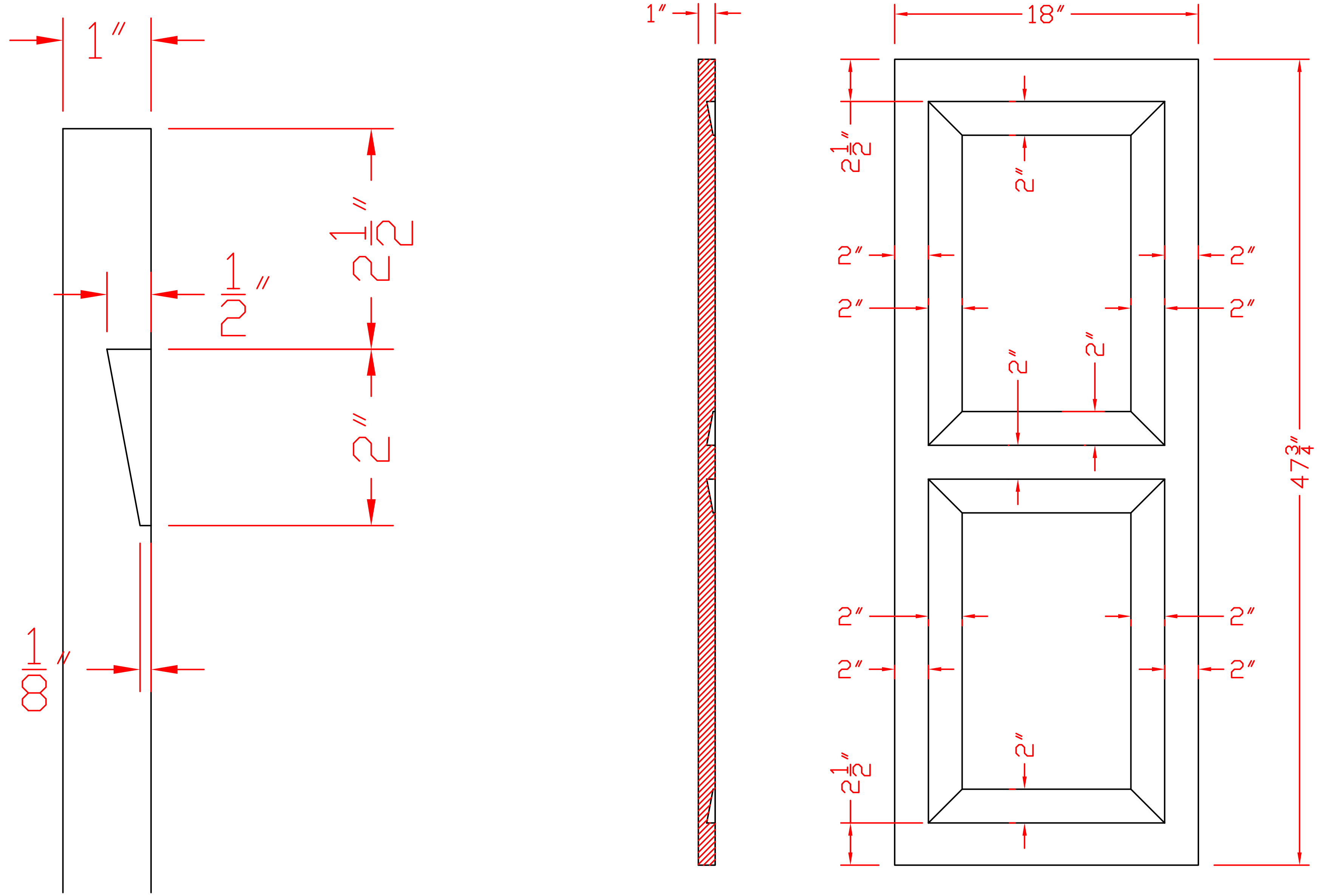

PROPERTY OF
CHEMCREST INC.
55 Bradwick Drive,
Concord, Ontario
L4K 1K5
www.chemcrest.com
orders@chemcrest.com
Phone: 1-800-665-6653
Fax: 1-888-715-1813

Design Copyright © Chemcrest Inc. 2011 All rights reserved

Date: July17,2005

Revised Date: August 17,2011

Drawn By: MS

NON VISUAL AND BACKSIDE AREAS OF PRODUCT MAY BE SUBJECT TO MODIFICATION BY CHEMCREST INC.

CUSTOMER APPROVAL

CUSTOM MADE PARTS
ONCE A DRAWING IS SIGNED OFF AND PRODUCT IS MADE CUSTOMER CAN NOT RETURN PRODUCT TO CHEMCREST INC.

Part #: **SHRP1848**
(Quote part number when re-ordering)

Part: **Shutter (Raised Panel Style)**

Dimensions: Width: 18" Height: 47 3/4" Projection: 1"

Tolerance: +/- 1/4" | Scale: Not to scale

Material: Polyurethane | Texture: Smooth